DATA SHEET

5 FRAME PLUNGER PUMP

The Pumps with Nine Lives

Stainless Steel Models	Stainless Steel Flushed Models	Nickel Aluminum Bronze Models
311, 341, 351	**311C, 341C, 351C**	**317, 347, 357**

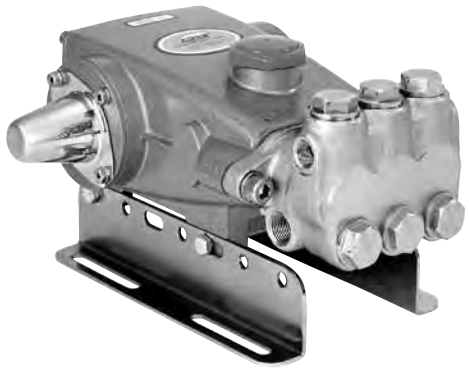

Model 311 Shown
(Shaft protector and mounting rails sold separately)

FEATURES

- Triplex design offers high efficiency and low pulsation.
- Durable high pressure seals are lubricated and cooled by pumped liquid.
- Pre-set Lo-Pressure Seals provide secondary protection against external leaks and require no packing adjustment.
- Special flushed inlet manifold for models 311C, 341C and 351C permits external flush for added cooling with high temperature liquids and lubrication with low lubricity liquids.
- Standard NBR seals with alternative options for temperature and chemical compatibility.

COMMON SPECIFICATIONS

	U.S.	Metric
Max. Liquid Temperature (NBR)	160° F	71° C
Alternative seals available for high temp up to 200° F		
Bore	0.787"	20 mm
Crankcase Capacity	18 oz.	0.55 l
Inlet Ports (2)	1/2" NPT(F)	1/2" NPT(F)
Flushing Ports (2) (311C - 351C)	1/8" NPT(F)	1/8" NPT(F)
Discharge Ports (2)	3/8" NPT(F)	3/8" NPT(F)
Shaft Diameter	0.787"	20 mm
Weight	19.8 lbs.	9 kg
Dimensions	11.81 x 10.00 x 5.24"	300 x 254 x 133 mm

SPECIFICATIONS

SPECIFICATIONS	U.S. Measure	Metric Measure
311, 311C, 317		
Flow	4.0 gpm	15 lpm
Pressure Range	100 to 2200 psi	6.9 to 152 bar
Pump RPM*	950 rpm	950 rpm
Inlet Pressure Range	-5 to 60 psi	-0.35 to 4.1 bar
Stroke	0.709"	18 mm
ALTERNATIVE SPECIFICATIONS 311, 311C		
Flow	5.0 gpm	19 lpm
Pressure Range	100 to 1500 psi	6.9 to 103 bar
Pump RPM*	1190 rpm	1190 rpm
ALTERNATIVE SPECIFICATIONS 317		
Flow	5.0 gpm	19 lpm
Pressure Range	100 to 2000 psi	6.9 to 138 bar
Pump RPM*	1190 rpm	1190 rpm
341, 341C, 347 Direct Drive		
Flow	4.0 gpm	15 lpm
Pressure Range	100 to 1800 psi	6.9 to 124 bar
Pump RPM*	1725 rpm	1725 rpm
Inlet Pressure Range	Flooded to 60 psi	Flooded to 4.1 bar
Stroke	0.394"	10 mm
351, 351C, 357 Direct Drive		
Flow	5.0 gpm	19 lpm
Pressure Range	100 to 1500 psi	6.9 to 103 bar
Pump RPM*	1725 rpm	1725 rpm
Inlet Pressure Range	Flooded to 60 psi	Flooded to 4.1 bar
Stroke	0.472"	12 mm

*Pump minimum is 100 RPM

ALTERNATIVE SEAL CONFIGURATION

MATERIAL	SUFFIX CODE	MAXIMUM TEMPERATURE	
NBR	—	160° F	(71° C)
FPM	.0110	180° F	(82° C)
EPDM	.0220	160° F	(71° C)
IPFE	.0770	200° F	(93° C)
HT	.3000	180° F	(82° C)
STHT	.3400	200° F	(93° C)

See Reference Document 99REF017 for inlet conditions and RPM at high temperature.

DETERMINING THE PUMP R.P.M. $\frac{\text{Rated gpm}}{\text{Rated rpm}} = \frac{\text{"Desired" gpm}}{\text{"Desired" rpm}}$

DETERMINING THE REQUIRED H.P. $\frac{\text{Hp (Electric Brake)}}{} = \frac{\text{gpm x psi}}{1460}$

DETERMINING MOTOR PULLEY SIZE $\frac{\text{Motor Pulley O.D.}}{\text{Pump rpm}} = \frac{\text{Pump Pulley O.D.}}{\text{Motor rpm}}$

Refer to pump **Service Manual** for repair procedure and additional technical information.

PARTS LIST

ITEM	PART NUMBER	MATL	PART NUMBER	MATL	DESCRIPTION	QTY
	311, 311C, 341, 341C, 351, 351C		**317, 347, 357**			
2	30057	STL	30057	STL	Key (M6x6x25)	1
5	92538	S	92538	S	Screw, Sems HHC (M6x16)	8
8	43344	AL	43344	AL	Cover, Bearing	1/2
10	43343	NBR	43343	NBR	O-Ring, Bearing Cover - 70D	2
11	43222	NBR	43222	NBR	Seal, Oil, Crankshaft - (311, 311C, 317, 351, 351C, 357) (341, 341C, 347)	2/1
15	14480	STL	14480	STL	Bearing, Ball	2
20	45883	HS	45883	HS	Rod, Connecting Assy [09/05]	3
25	**43342**	FCM	**43342**	FCM	Crankshaft, Dual End - 311, 311C, 317	1
	44945	FCM	**44945**	FCM	Crankshaft, Single End - 341, 341C, 347	1
	43838	FCM	**43838**	FCM	Crankshaft, Dual End - 351, 351C, 357	1
30	44949	AL	44949	AL	Cover, Blind Shaft - 341, 341C	1
31	828710	—	828710	—	Protector, Oil Cap w/Foam Gasket	1
32	43211	ABS	43211	ABS	Cap, Oil Filler	1
33	14177	NBR	14177	NBR	O-Ring, Filler Cap - 70D	1
37	92241	—	92241	—	Gauge, Oil, Bubble w/Gasket	1
38	44428	NBR	44428	NBR	Gasket, Flat, Oil Gauge - 80D	1
40	92542	S	92542	S	Screw, Sems HHC (M6x20)	4
48	25625	STCP	25625	STCP	Plug, Drain (1/4"x19 BSP)	1
49	23170	NBR	23170	NBR	O-Ring, Drain Plug - 70D	1
50	48772	AL	48772	AL	Cover, Rear [10/01] (See Tech Bulletin 090)	1
51	48773	NBR	48773	NBR	O-Ring, Rear Cover [10/01] (See Tech Bulletin 090)	1
53	48769	AL	48769	AL	Crankcase [05/02] (See Tech Bulletin 090)	1
56	43355	POP	43355	POP	Pan, Oil	1
64	43351	CM	43351	CM	Pin, Crosshead	3
65	45256	SSZZ	45256	SSZZ	Rod, Plunger	3
70	43228	NBR	43228	NBR	Seal, Oil, Crankcase	3
75	43328	S	43328	S	Slinger, Barrier	3
88	45697	S	45697	S	Washer, Keyhole (M18x10)	3
90	43367	CC	43367	CC	Plunger (M20x72)	3
95	89653	SS	89653	SS	Stud, Plunger Retainer (M6x58)	3
96	43235	PTFE	43235	PTFE	Back-up-Ring, Plunger Retainer	3
97	17399	NBR	17399	NBR	O-Ring, Plunger Retainer - 80D	3
	14160	*FPM*	*14160*	*FPM*	*O-Ring, Plunger Retainer - 80D*	*3*
	◆ *46204*	*EPDM*	◆ *46204*	*EPDM*	*O-Ring, Plunger Retainer - 70D*	*3*
98	44041	SS	44041	SS	Gasket	3
99	44031	SS	44031	SS	Retainer, Plunger	3
100	45688	PVDF	45688	PVDF	Retainer, Seal 2-PC [04/06] (See Tech Bulletin 105)	3
101	43302	—	43302	—	Wick, Long Tab	3
106	44127	NBR	44127	NBR	Seal, LPS w/SS-Spg	3
	45153	*FPM*	*45153*	*FPM*	*Seal, LPS w/SS-Spg*	*3*
	◆ *48429*	*EPDM*	◆ *48429*	*EPDM*	*Seal, LPS w/SS-Spg*	*3*
120	45680	SS	45680	SS	Case, Seal	3
121	14200	NBR	14200	NBR	O-Ring, Seal Case - 70D	3
	11719	*FPM*	*11719*	*FPM*	*O-Ring, Seal Case*	*3*
	◆ *48907*	*EPDM*	◆ *48907*	*EPDM*	*O-Ring, Seal Case*	*3*
125	44649	SNG	44649	SNG	Seal, HPS w/SS	3
	44936	*FPM*	*44936*	*FPM*	*Seal, HPS w/SS*	*3*
	46667	*HT*	*46667*	*HT*	*Seal, HPS "Hi-Temp", 2-Pc w/S-Support*	*3*
139	**45156**	SS	**44563**	NAB	Plug, Inlet [1/2" NPT(M)]	1
162	48361	D	48361	D	Back-up-Ring, Seat	6
163	43358	NBR	43358	NBR	O-Ring, Seat - 70D	6
	44938	*FPM*	*44938*	*FPM*	*O-Ring, Seat - 70D*	*6*
	◆ *48908*	*EPDM*	◆ *48908*	*EPDM*	*O-Ring, Seat*	*6*
164	44128	SS	44128	SS	Seat	6
166	44057	SS	44057	SS	Valve	6
167	44056	SS	44056	SS	Spring, Valve	6
168	44565	PVDF	44565	PVDF	Retainer, Valve Spring	6
171	44832	S	44832	S	Spring, Coil	6
172	17615	NBR	17615	NBR	O-Ring, Valve Plug - 75D	6
	15855	*FPM*	*15855*	*FPM*	*O-Ring, Valve Plug - 70D*	*6*
	◆ *48431*	*EPDM*	◆ *48431*	*EPDM*	*O-Ring, Valve Plug - 75D*	*6*
174	**49296**	SS	**44833**	NAB	Plug, Valve [05/06]	6
185	**45151**	SS	**44124**	NAB	Manifold Head (See Tech Bulletin 079 - NAB Only)	1
	49583	*SS*	—	—	*Manifold Head-Flushed (311C, 341C, 351C)*	*1*
186	15847	S	15847	S	Lockwasher (M10)	2
188	87950	S	87950	S	Screw HSH (M10x35) [01/04]	2
250	*118672*	*STCP*	*118672*	*STCP*	*Protector, Shaft (Belt Drive Only)*	*1*
255	*30243*	*STZP*	*30243*	*STZP*	*Mount, Direct (Belt Drive Only)*	*1*
260	*30611*	*STZP*	*30611*	*STZP*	*Mount, Assy Rail - B (Belt Drive Only)*	*1*
265	*30659*	—	*30659*	—	*Mount, Assy (30611,30633,118672) (Belt Drive Only)*	*1*
270	*30633*	*STL*	*30633*	*STL*	*Assy, Pulley & Key (30058,30057) (Belt Drive Only)*	*1*
275	*30944*	*STL*	*30944*	*STL*	*Assy, Hub & Key (M20 w/M6 Keyway) (30945, 30057) (Belt Drive Only) [See Tech Bulletin 003]*	*1*
283	*34334*	—	*34334*	—	*Kit, Oil Drain (3/8"x24") (See Individual Data Sheet)*	*1*
299	***812207***	*SS*	***814559***	*NAB*	*Head, Complete*	*1*
	818444	*SS*	—	—	*Head, Complete-Flushed (311C, 341C, 351C)*	*1*

EXPLODED VIEW

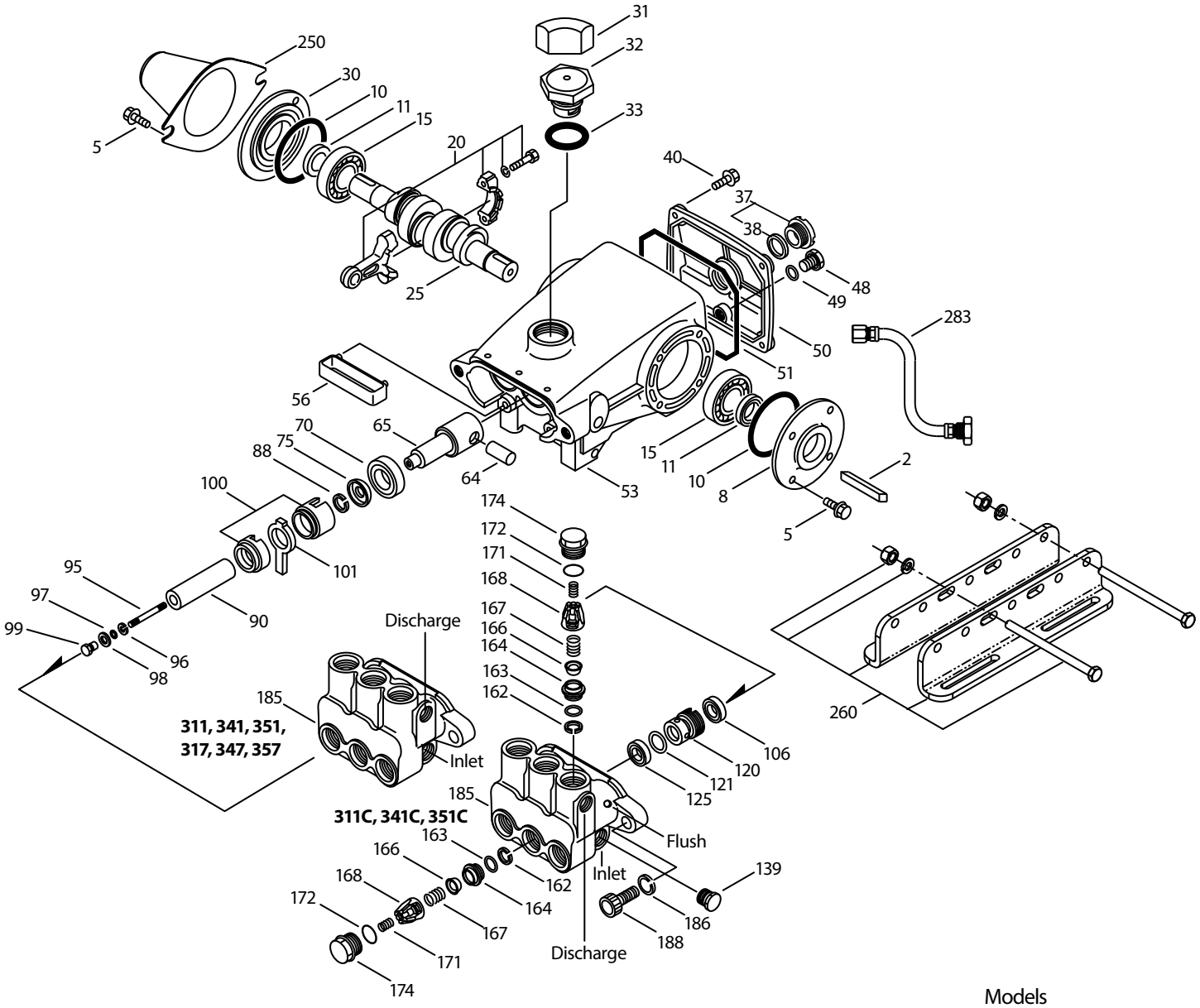

Models
Stainless Steel 311, 341, 351
Stainless Steel Flushed 311C, 341C, 351C
Nickel Aluminum Bronze 317, 347, 357
January 2019

ITEM	PART NUMBER	MATL	PART NUMBER	MATL	DESCRIPTION	QTY
	311, 311C, 341, 341C, 351, 351C		**317, 347, 357**			
300	*34153*	*NBR*	*34153*	*NBR*	*Kit, Seal (Inclds: 97,101,106,121,125)* ***Standard***	*1*
	34155	*FPM*	*34155*	*FPM*	*Kit, Seal (Inclds: 97,101,106,121,125)* ***.0110***	*1*
	33623	*HT*	*33623*	*HT*	*Kit, Seal, "Hi-Temp" (Inclds: 97,101,106,121,125)* ***.3000***	*1*
	◆ *31163*	*EPDM**	◆ *31163*	*EPDM**	*Kit, Seal (Inclds: 97,101,106,121,125)* ***.0220***	*1*
310	*31152*	*NBR*	*31152*	*NBR*	*Kit, Valve pre-assembled (Inclds: 162-164,166-168,171,172)* ***Standard***	*2*
	34152	*FPM*	*34152*	*FPM*	*Kit, Valve pre-assembled (Inclds: 162-164,166-168,171,172)* ***.0110***	*2*
350	*30696*	*STZP*	*30696*	*STZP*	*Plier, Reverse*	*1*
351	*33004*	*STZP*	*33004*	*STZP*	*Socket, Seal Case (1/2" Drive)*	*1*
—	*6107*	*—*	*6107*	*—*	*Oil, Bottle (21 oz.) ISO 68 Hydraulic (Fill to specified crankcase capacity prior to start-up)*	*1*
—	***6119***	*—*	*—*	*—*	*Lubricant, Antiseize (2 oz.) (See Tech Bulletin 095)*	*1*

Bold print part numbers are unique to a particular pump model. *Italics are optional items.* ◆ Silicone oil/grease required.
[ ] Date of latest production change. *Review individual parts in each kit for material code information.
View Tech Bulletins 002, 003, 008, 024, 027, 032, 035, 036, 043, 045, 046, 049, 052, 053, 054, 073, 074, 079, 083, 090, 095 and 105 for additional information.
MATERIAL CODES (Not Part of Part Number): ABS=ABS Plastic AL=Aluminum CC=Ceramic CM=Chrome-moly D=Acetal EPDM=Ethylene Propylene Diene Monomer
FCM=Forged Chrome-moly FPM=Fluorocarbon HS=High Strength HT=High Temp (EPDM Alternative) NAB=Nickel Aluminum Bronze NBR=Medium Nitrile (Buna-N)
POP=Polypropylene PTFE=Pure Polytetrafluoroethylene PVDF=Polyvinylidene Fluoride S=304SS SNG=Special Blend (Buna) SS=316SS
SSZZ=316SS/Zamak STL=Steel STCP=Steel/Chrome Plated STZP=Steel/Zinc Plated

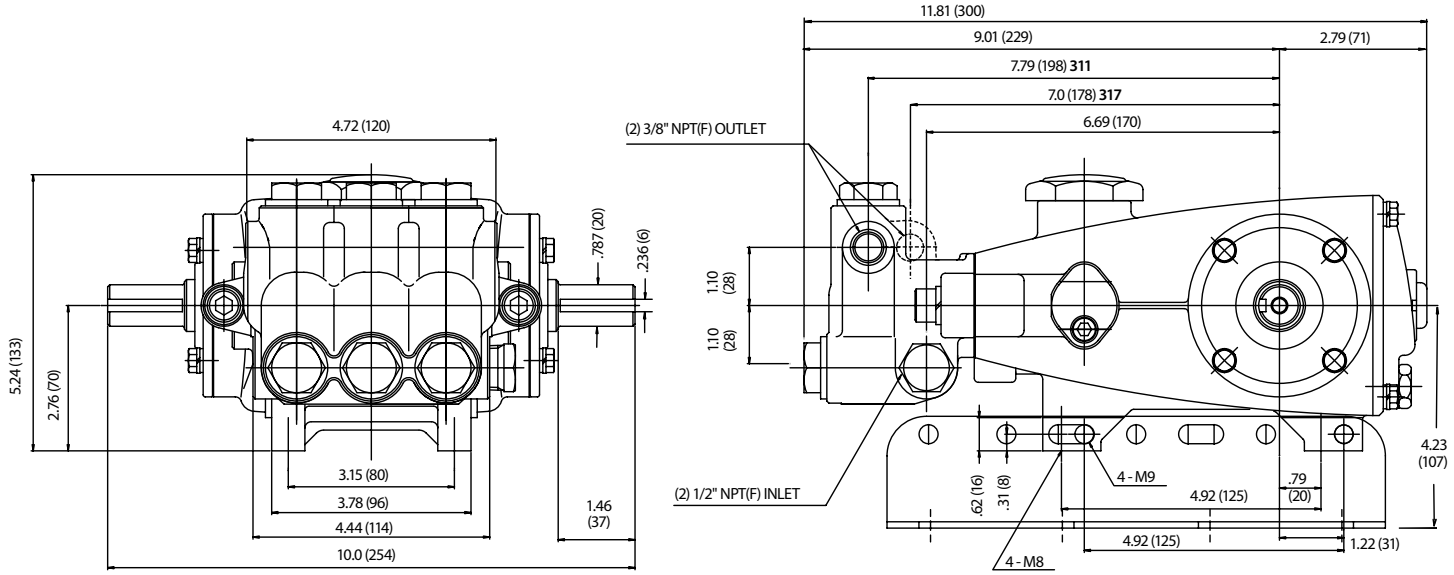

Models 311, 311C, 317, 351, 351C, 357

⚠ CAUTIONS AND WARNINGS

All High Pressure Systems require a primary pressure regulating device (i.e. regulator, unloader) and a secondary pressure relief device (i.e. pop-off valve, relief valve). Failure to install such relief devices could result in personal injury or damage to pump or property. Cat Pumps does not assume any liability or responsibility for the operation of a customer's high pressure system.

Read all CAUTIONS and WARNINGS before commencing service or operation of any high pressure system. The CAUTIONS and WARNINGS are included in each service manual and with each Accessory Data sheet. CAUTIONS and WARNINGS can also be viewed online at www.catpumps.com/cautions-warnings or can be requested directly from Cat Pumps.

WARRANTY

View the Limited Warranty on-line at www.catpumps.com/warranty.

CAT PUMPS 1681 94th Lane N.E., Mpls, MN 55449-4324 P: 763.780.5440 F: 763.780.2958 E: techsupport@catpumps.com www.catpumps.com